OpenMV I/F Board
USERS GUIDE

[Rev 1.0]

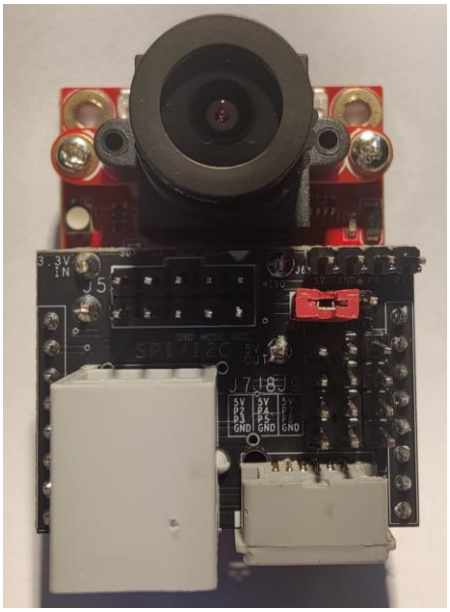

2023. 09. 21

HAKYEONG JEON

hakyungi@hanmail.net

READ ME FIRST!

THIS IS APPLICATION WITH OpenMV I/F BOARD

- **Be careful of electrical shorts.**
- **A short circuit may damage peripheral devices.**
- **Any damage caused by a short circuit is entirely the responsibility of the user.**
- **Unless there is a soldering defect, there is no reason for the board to fail.**
- **Except for initial component defects or soldering defects, we are not eligible for A/S.**
- **Handle with care.**
- **You must be very careful when connecting electrical signals.**
- **Sample sources and resources related to each example can be found at https://github.com/hakyungi/Codes**

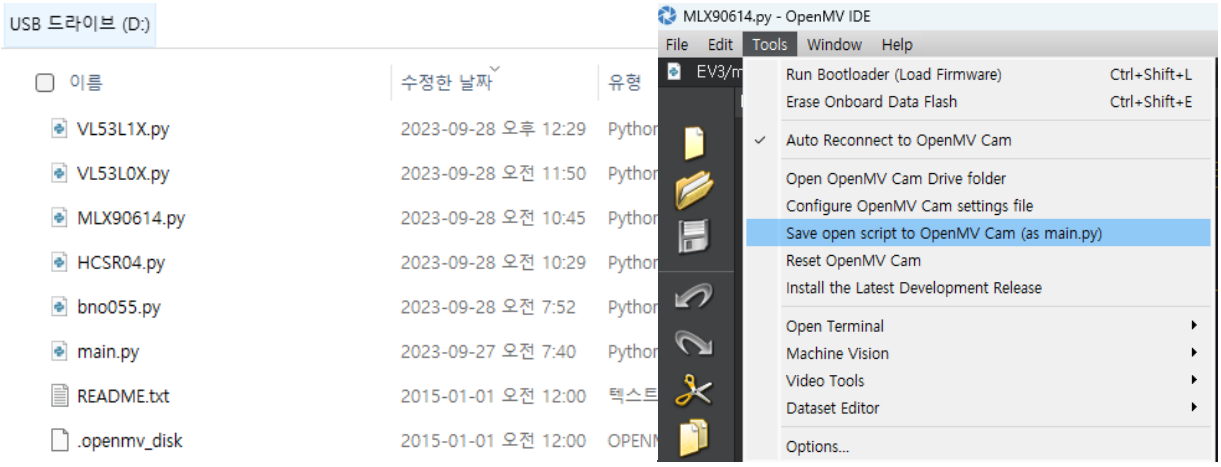

- **Save the module files to your OpenMV drive.**
- **OpenMV Camera runs main.py when powered on.**
- **When you are finished developing, save the program as main.py in the OpenMV drive.**

BOARD IMAGE

Copy image from openmv.io

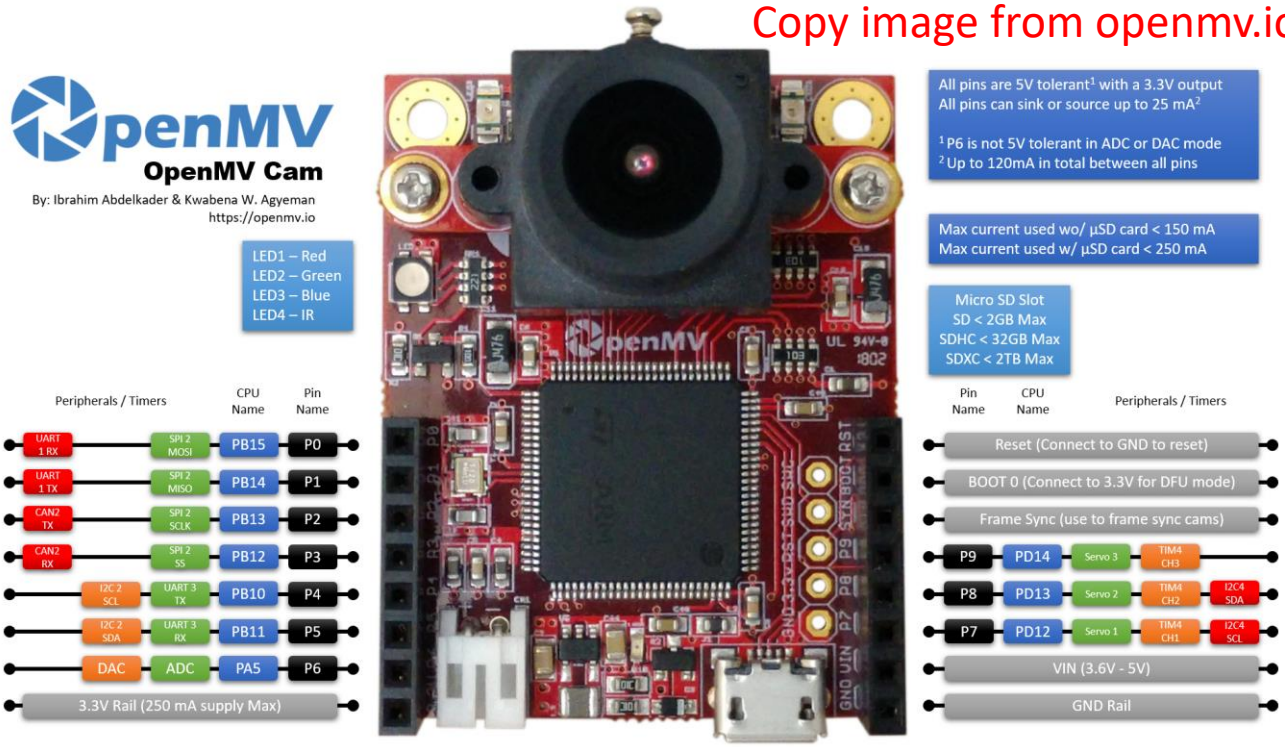

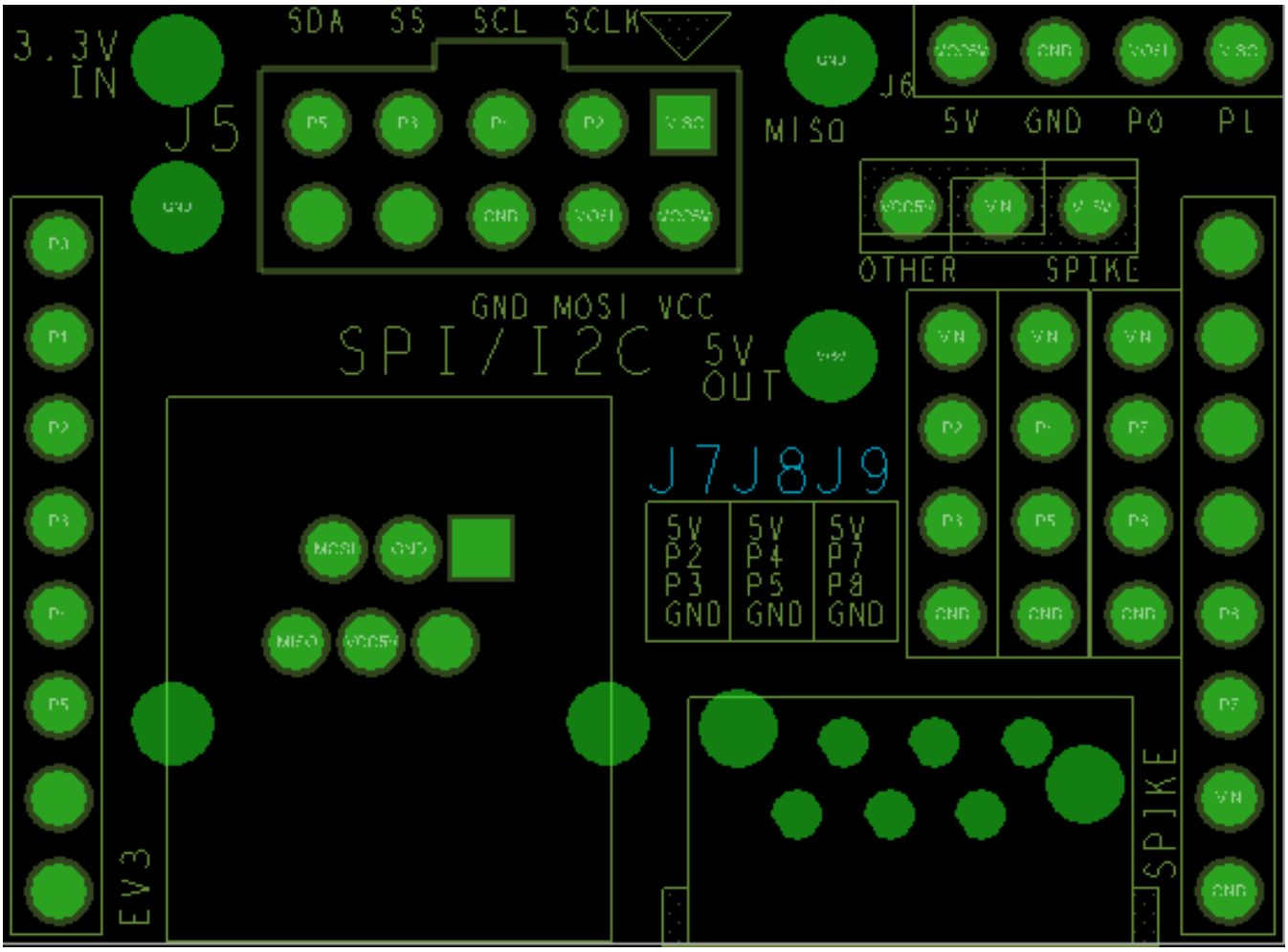

OpenMV I/F Board

BLOCK DIAGRAM

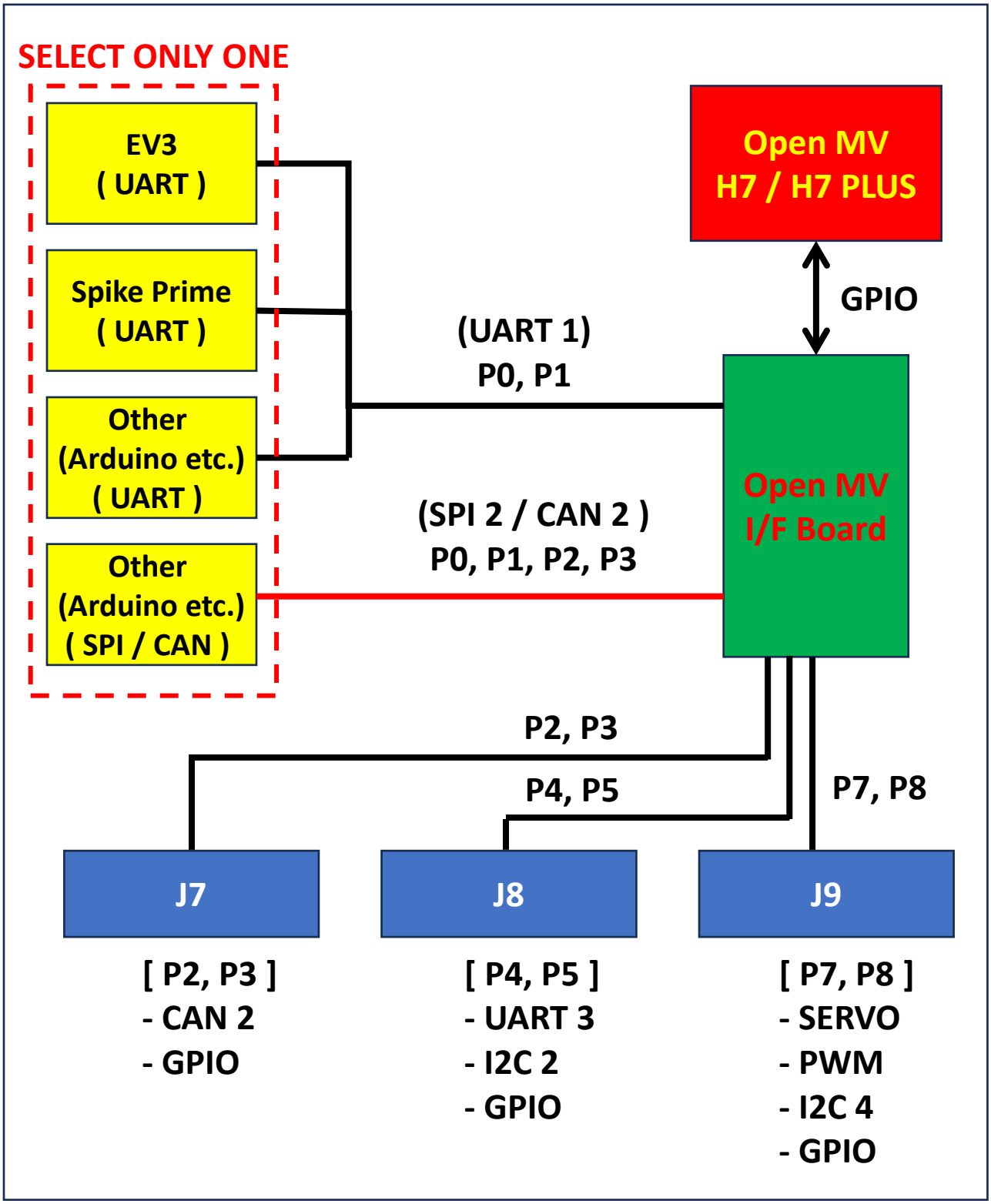

VOLTAGE SELECTION

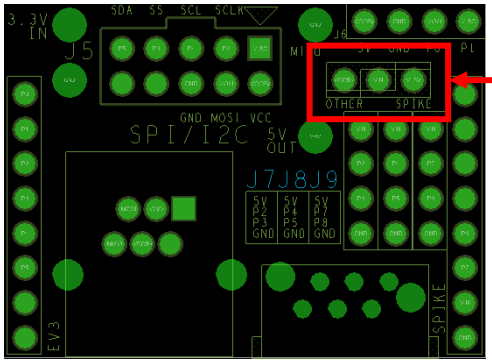

VOLTAGE SELECT JUMPER

5V SOURCE

EV3

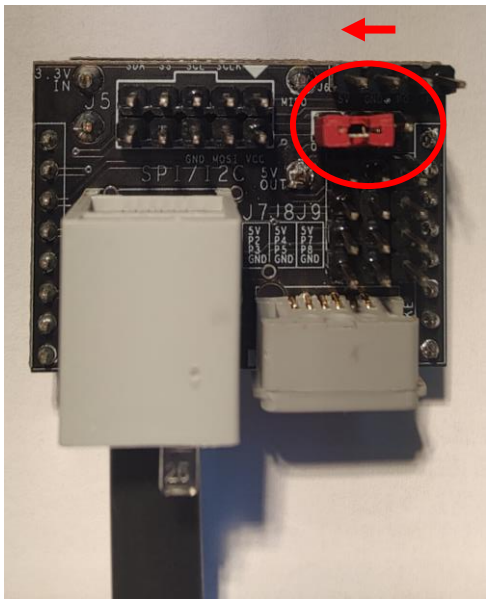

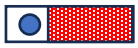

3.3V SOURCE

SPIKE PRIME

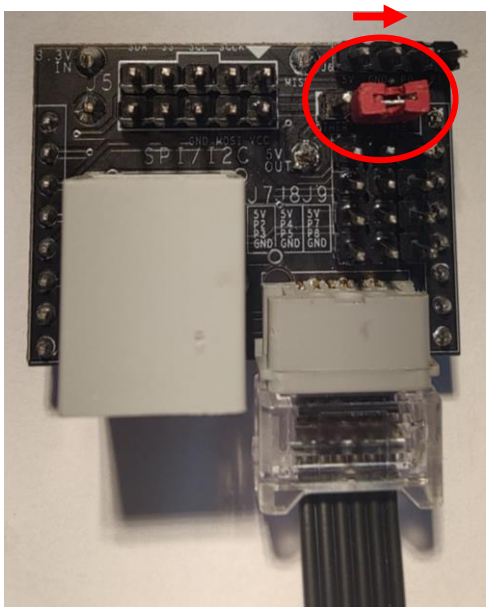

THIS IS VERY IMPORTANT FOR SPIKE PRIME

EXAMPLE (PACKAGE)

EV3(or Spike Prime) + OpenMV Camera
+ VL53L0X TOF 3ea + BNO055 9 DOF IMU

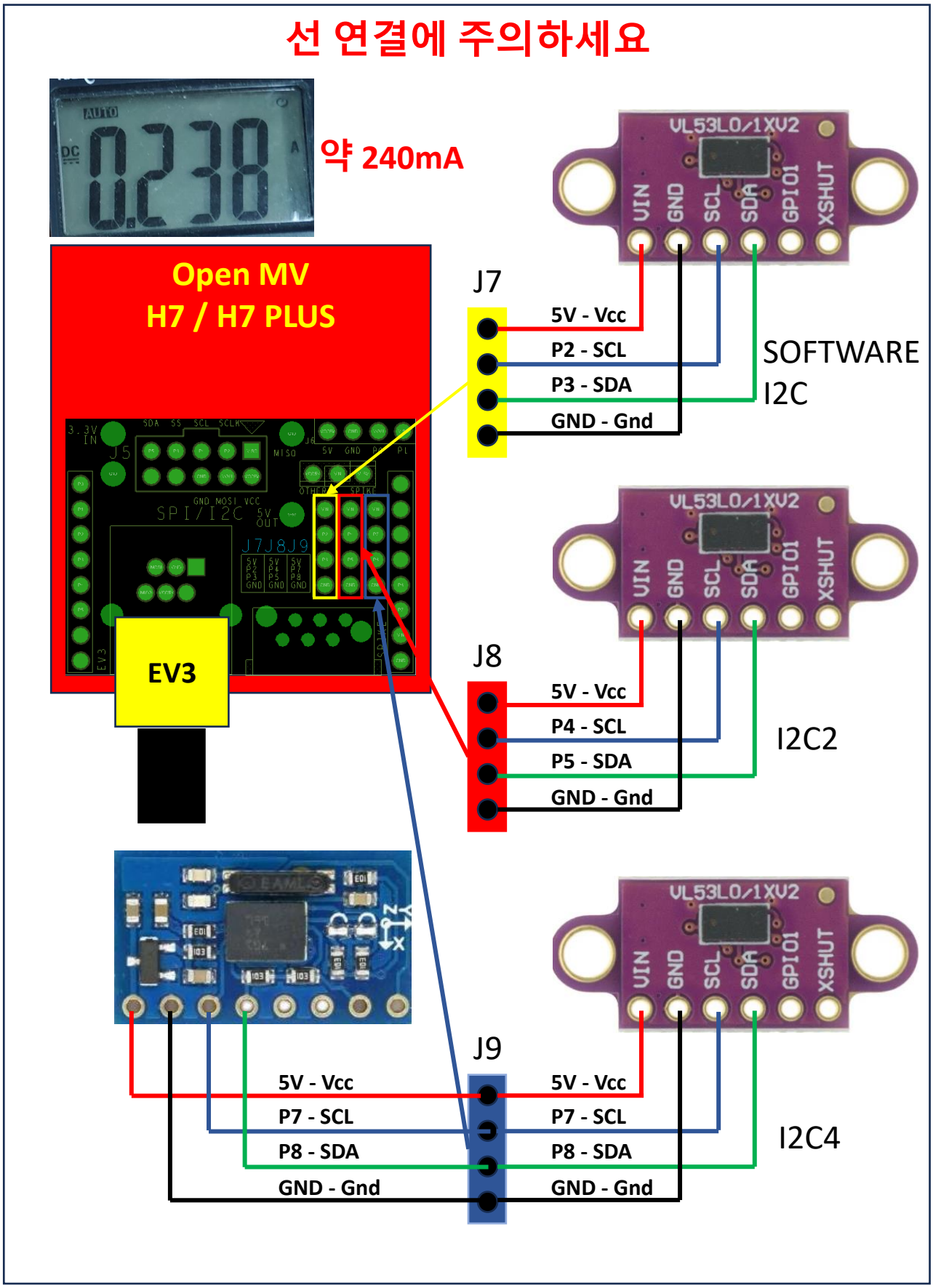

EXAMPLE (USE I2C)

I2C BUS (Multi-Device on same line)

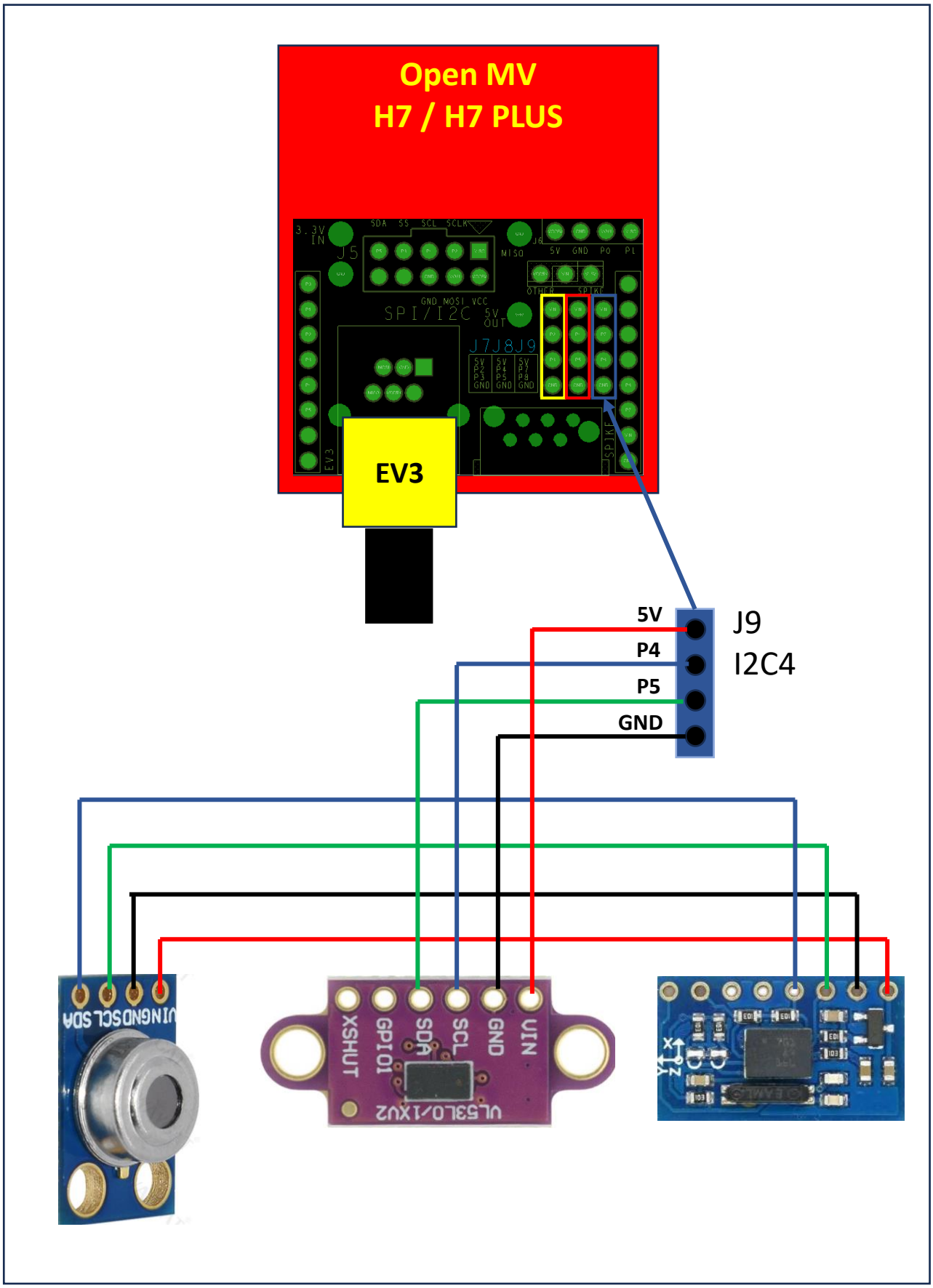

EXAMPLE (USE GPIO)

EV3(or Spike Prime) + OpenMV Camera + HC-SR04

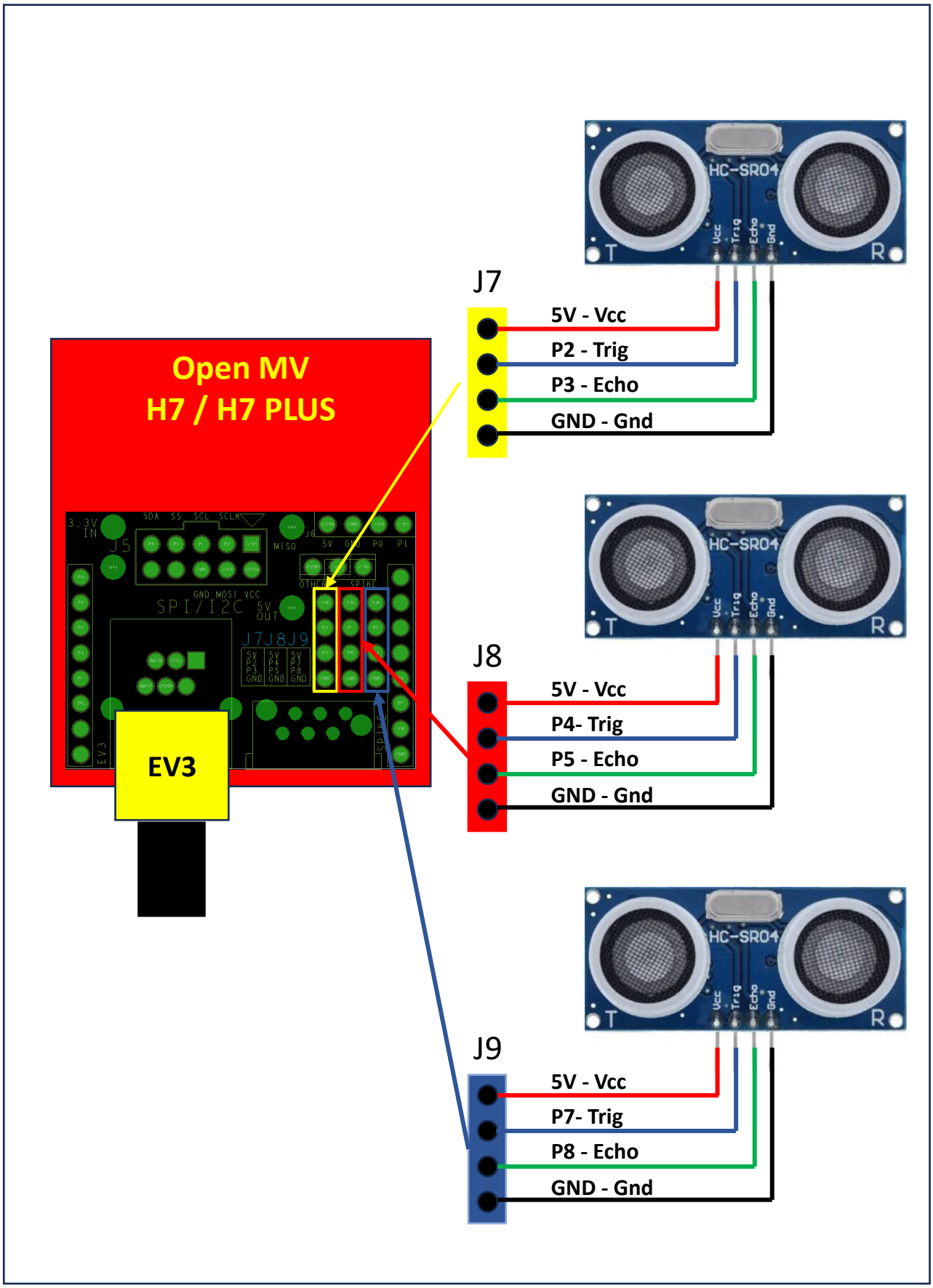

EXAMPLE (USE I2C)

EV3(or Spike Prime) + OpenMV Camera + VL53L0X

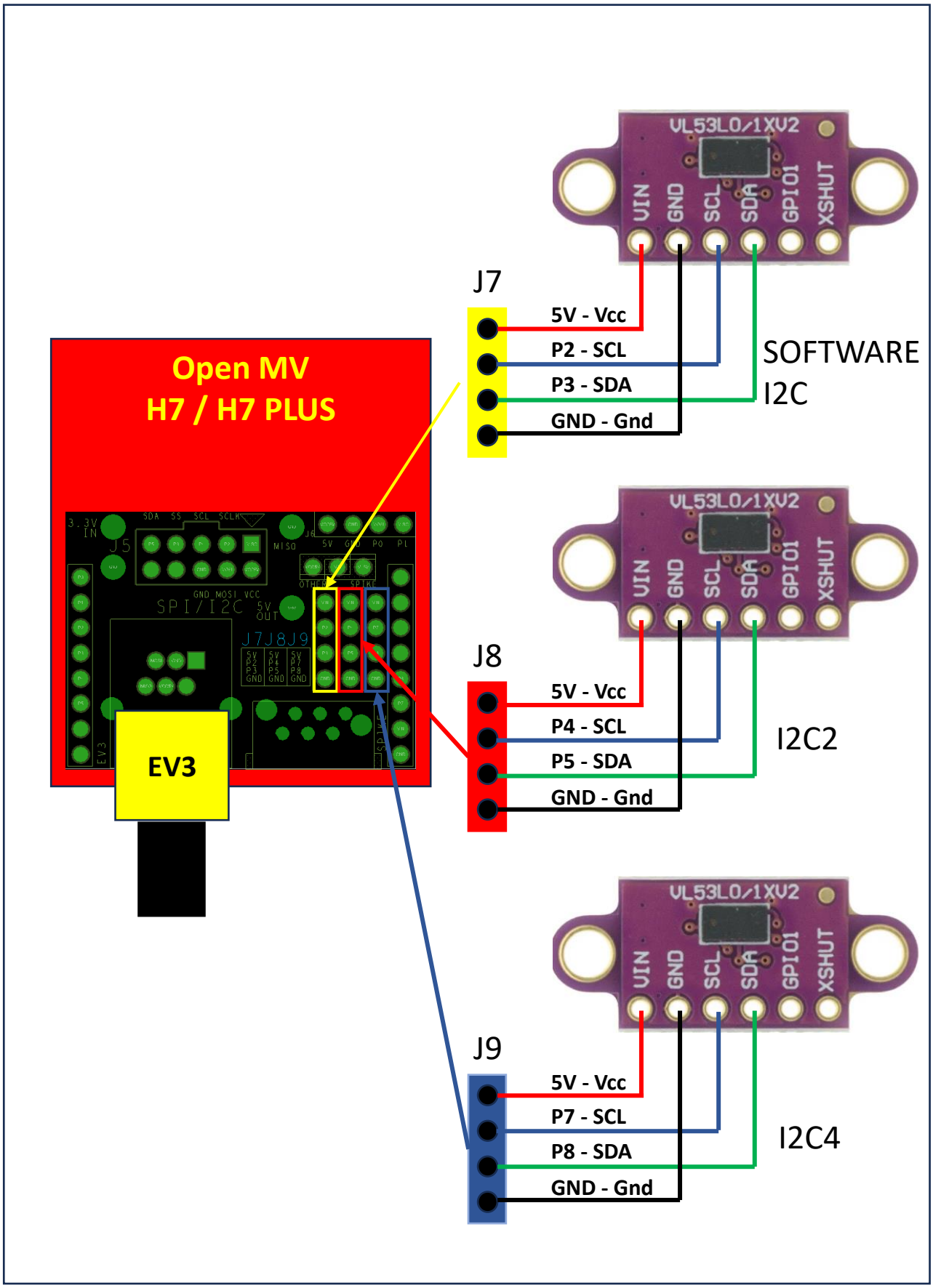

EXAMPLE (USE I2C)

I2C BUS (Multi-Device on same line)

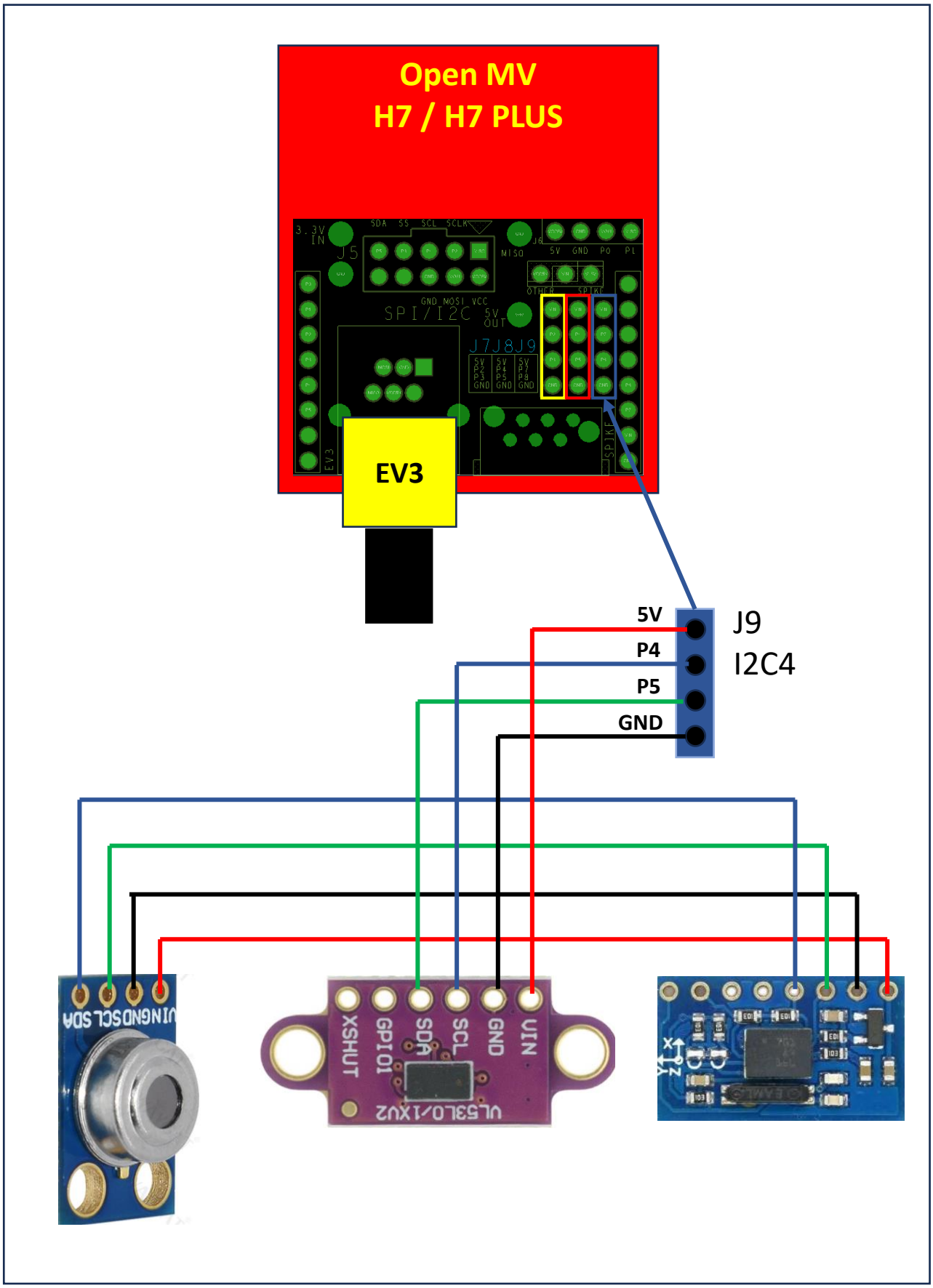

EXAMPLE (UART WITH EV3)

EV3(or Spike Prime) + OpenMV Camera + Sensos

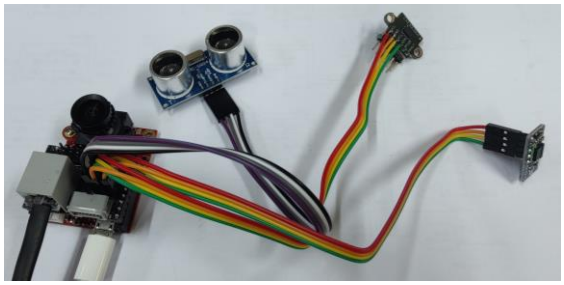

GPIO

J7

5V - Vcc

P2 - Trig

P3 - Echo

GND - Gnd

Open MV

H7 / H7 PLUS

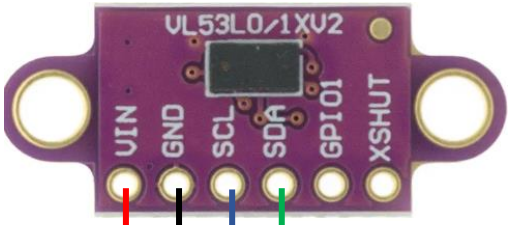

I2C2

J8

5V - Vcc

P4 - SCL

P5 - SDA

GND - Gnd

EV3

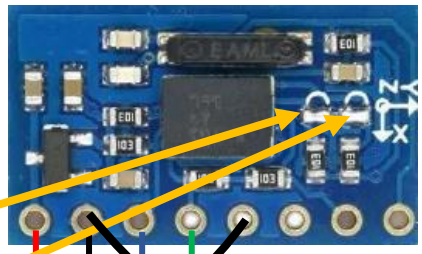

I2C4

J9

5V - Vcc

P7 - SCL

P8 - SDA

GND - Gnd

CONNECT

FOR I2C MODE

CONNECT

FOR I2C MODE

I2C Address

Close : 0x28

Open : 0x29

EXAMPLE (WITHOUT CAMERA)
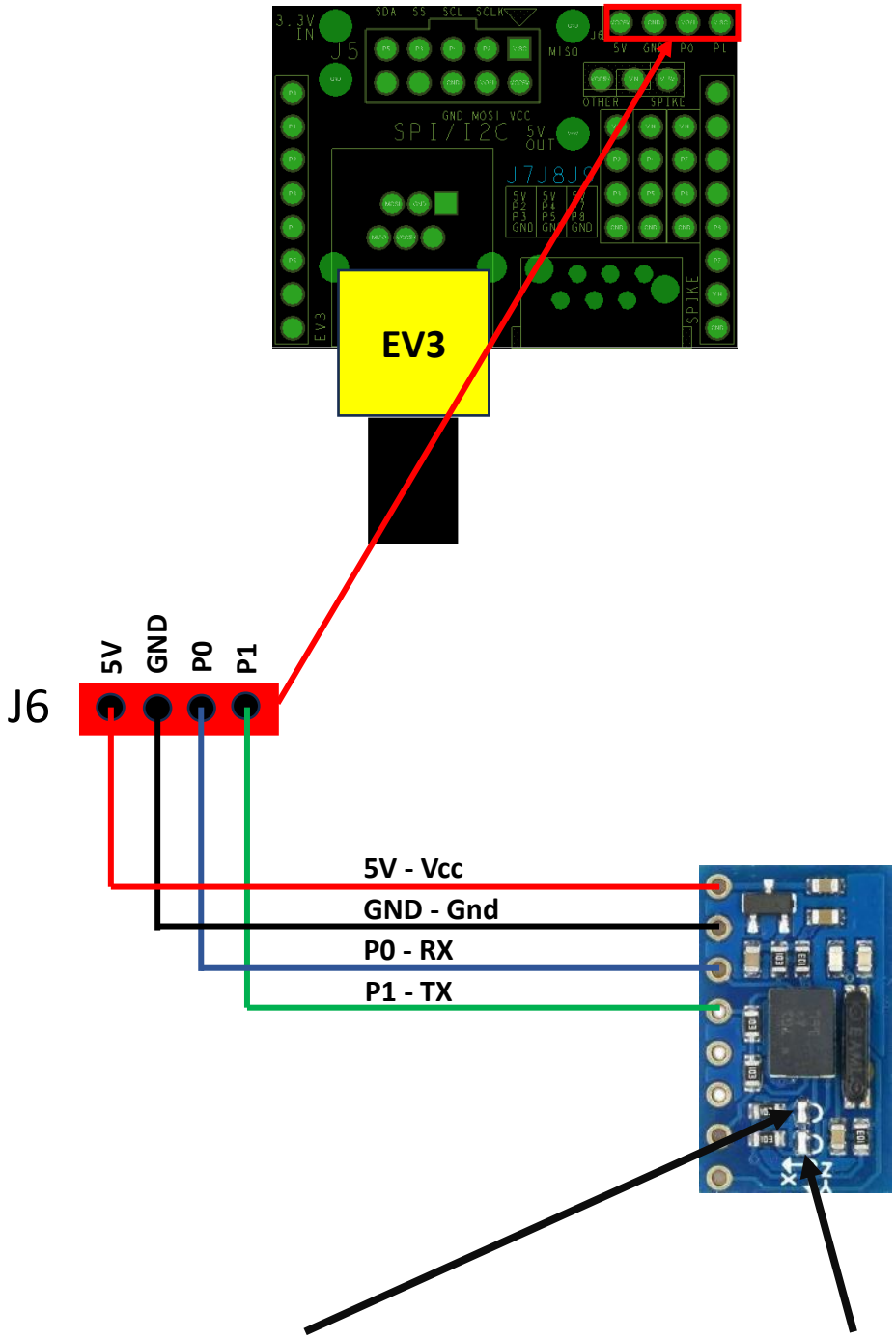
UART (BNO055 IMU SENSOR WITH UART MODE)